SALES DRAWING SALES DRAWING SALES DRAWING

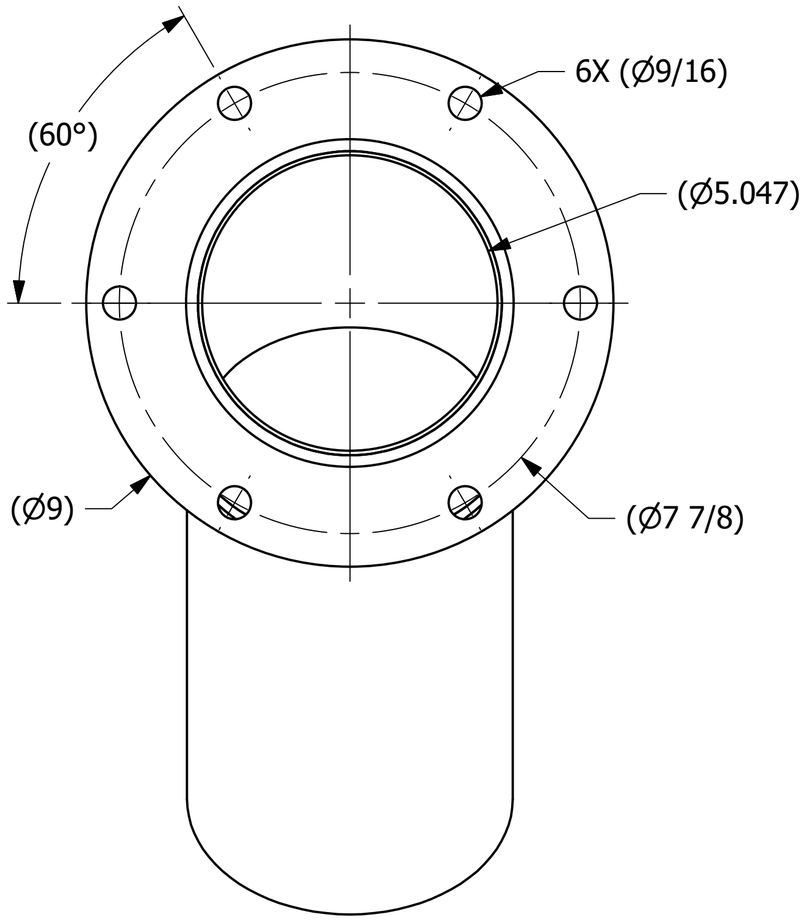

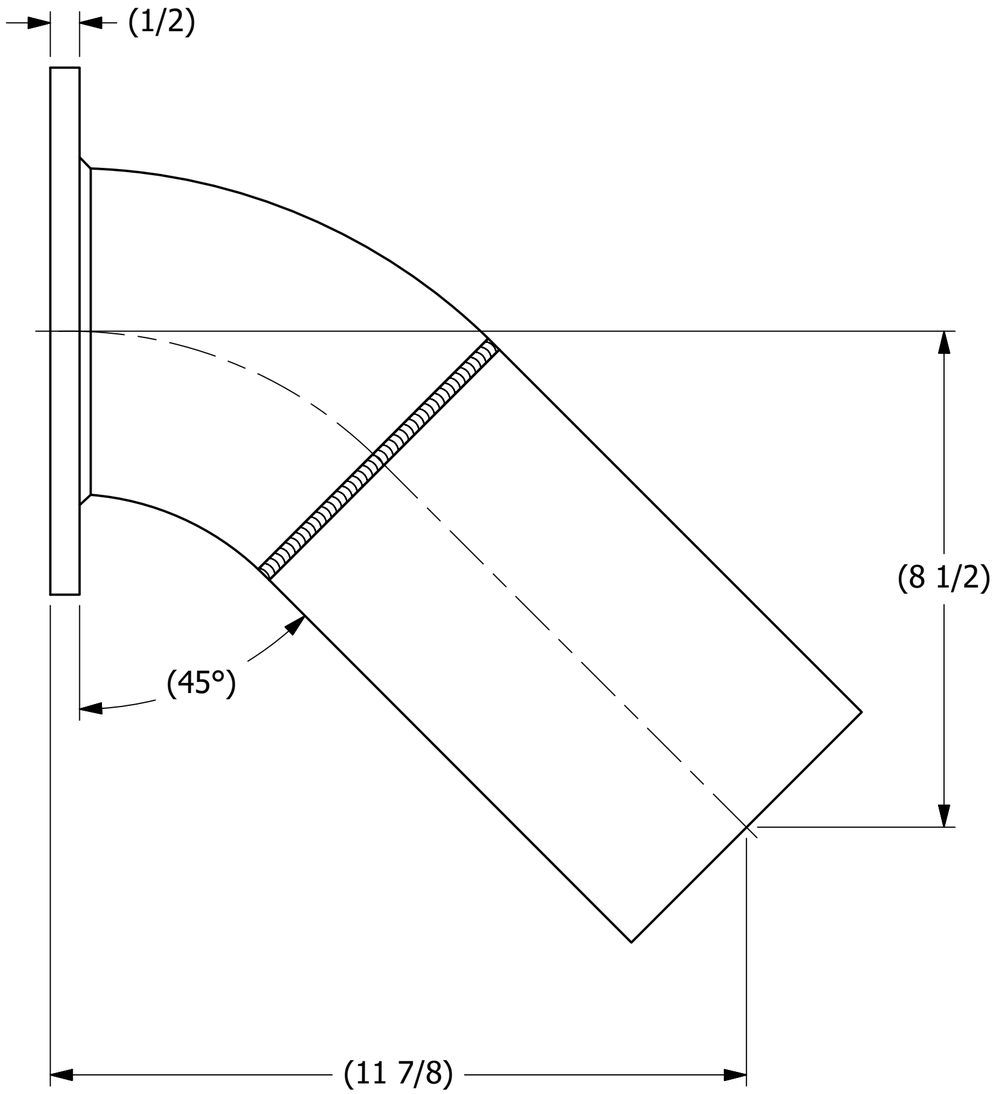

REV	BY	DATE	REF #	PUB
D	TAK	7/6/20	202007060903	TAK

UNLESS OTHERWISE SPECIFIED DIMENSIONAL TOLERANCES
FRACTIONAL: ±1/16
X.XX: ±.03
X.XXX: ±.015
ANGLE: ±1°
DEBURR ALL SHARP EDGES. ALL MACHINED SURFACES TO HAVE A 125 RMS FINISH UNLESS NOTED OTHERWISE.
THIRD ANGLE PROJECTION

DRAWN BY:	CHL
CHECKED BY:	ACC
PROTOTYPE DATE:	8/16/2006
APPROVED FOR PRODUCTION BY:	ACC
PRODUCTION DATE:	1/18/2008
SIZE:	C
DRAWING #:	21064

SALCO PRODUCTS, INC.

PART NAME: FLANGED ELBOW 5"X45°

MATERIAL: ALUMINUM

PROJECT #: 040617 | SHEET #: 1 OF 1 | SCALE: 1:2

PART #: PD5A45F1

THIS PRINT, PROPERTY OF SALCO PRODUCTS INC, CONTAINS PROPRIETARY INFORMATION AND MUST NOT BE COPIED, REPRODUCED, OR USED DETRIMENTALLY TO OUR INTEREST.